FC6053, FC6051, FC6050

1

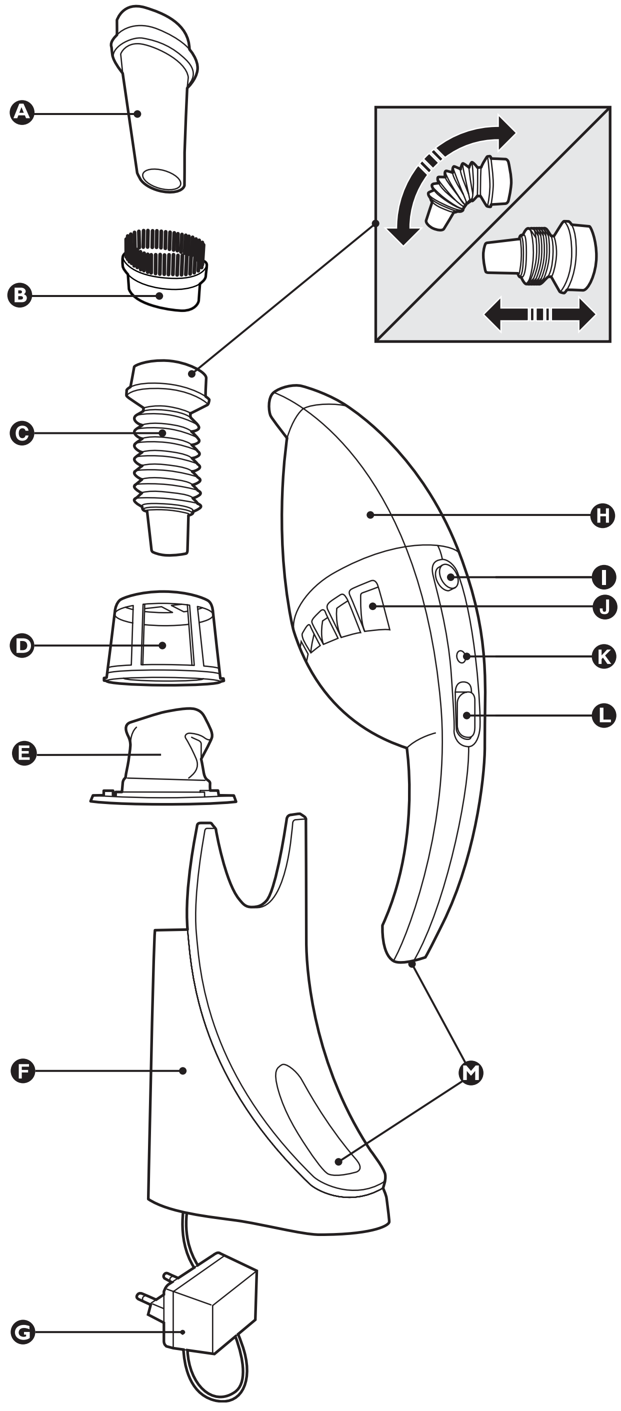

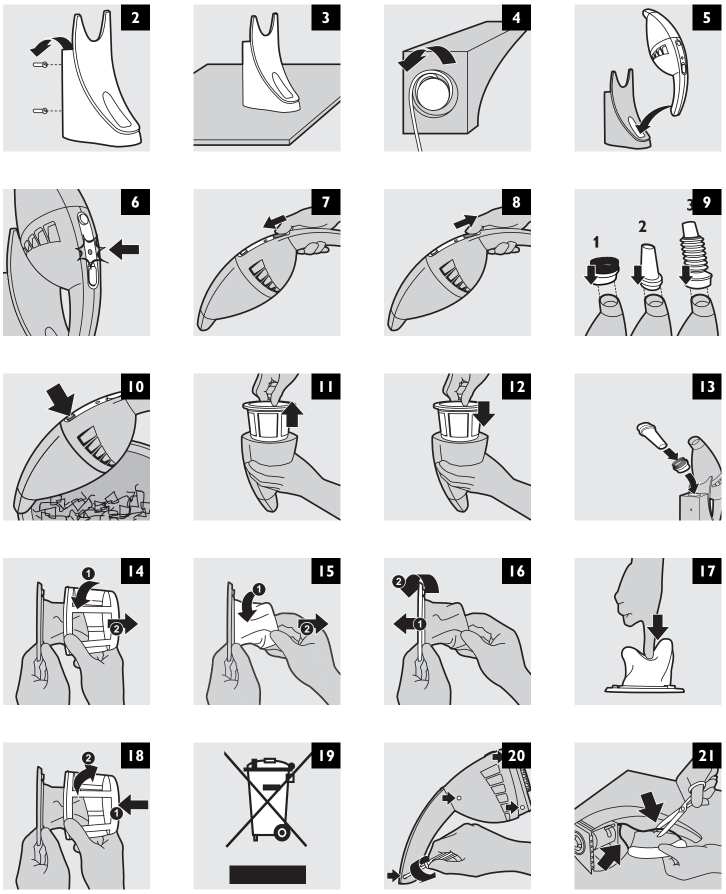

PHILIPS

ENGLISH

General description (fig. 1)

- A Crevice tool
- B Brush tool
- C Bendable crevice tool (FC6053 only)
- D Outer filter
- E Inner filter
- F Charging unit
- G Adapter
- H Dust compartment
- I Dust compartment release button
- J Exhaust air openings
- K Charging light (LED)
- L On/off slide
- M Contact strips

Important

Read these instructions for use carefully before using the appliance and save them for future reference.

- **Check if the voltage indicated on the adapter corresponds to the local mains voltage before you connect the appliance.**
- **Do not use the appliance if it is damaged in any way. Take it to an authorised Philips service centre for repair.**
- **The adapter and the charging unit of this appliance cannot be replaced. If the adapter or charging unit is damaged, the appliance must be discarded.**
- **Never suck up water or any other liquid. Never suck up flammable substances and do not suck up ashes until they are cold.**
- **Never immerse the vacuum cleaner or the charging unit in water.**
- **Remove the adapter from the wall socket before cleaning the charging unit.**
- **Only charge the vacuum cleaner with the adapter and charging unit supplied. During charging, the adapter will feel warm to the touch. This is normal.**
- **Always switch the vacuum cleaner off after use.**
- **Keep the appliance out of the reach of children.**
- **The voltage on the contact strips in the charging unit is low (max. 12 volts) and therefore not dangerous.**
- **Never block the exhaust air openings during vacuuming.**
- **Switch the appliance off when recharging it.**
- **Always use the vacuum cleaner with filter unit.**

Preparing for use

Installing the charging unit

1 Attach the charging unit to the wall as indicated in the figure (fig. 2).

If you attach the charging unit to the wall, the space between the screw holes should be 70 mm.

2 You can also place the charging unit on a horizontal surface (e.g. a table or desk) (fig. 3).

3 Excess mains cord can be wound round the charging unit (fig. 4).

Charging the appliance

Charge the appliance for at least 16 hours before you use it for the first time.

1 Insert the adapter into the wall socket.

2 Place the vacuum cleaner on the charging unit (fig. 5).

- **The charging light will go on to indicate that the appliance is charging (fig. 6).**
  - *The charging light will stay on as long as the appliance is connected to the charging unit and the adapter is in the wall socket.*
  - *The charging light does not give any information about the charge level of the built-in batteries.*
  - *To optimise the lifetime of the rechargeable batteries, periodically discharge them completely by letting the appliance run until it stops and then recharge them fully again.*

Using the appliance

1 Push the on/off slide forwards to switch the appliance on (fig. 7).

2 Push the on/off slide backwards to switch the appliance off (fig. 8).

Accessories

The appliance comes with the following accessories:

- 1. a brush tool to clean delicate surfaces;
- 2. a crevice tool to clean corners or narrow gaps;
- 3. a bendable crevice tool, contractible and extendable to clean hard-to-reach places (FC6053 only).

1 Take the accessory you want to use.

2 Attach the accessory to the nozzle of the appliance (fig. 9).

Cleaning

<u>Always remove the adapter from the wall socket before cleaning the charging unit.</u>

1 Clean the appliance with a damp cloth.

Emptying the dust compartment

Make sure you empty the dust compartment and clean the filters regularly.

1 Hold the appliance over a dustbin and press the dust compartment release button (fig. 10).

2 Remove the filter unit from the dust compartment (fig. 11).

3 Empty the dust compartment with your free hand.

4 Clean the outer filter and the inner filter.

- *To clean the inner filter, you can remove the outer filter from the filter holder by turning it anticlockwise.*
- *You can clean the outer filter and the inner filter with a brush or with a normal vacuum cleaner if they are very dirty.*
- *If necessary, you can clean the outer filter and the inner filter in cold or lukewarm water.*

5 Place the outer filter back onto the filter holder and put the filter holder back into the dust compartment. Make sure you insert the filter holder in the correct way (fig. 12).

<u>Never use the vacuum cleaner if the filter unit is still wet.</u>

Storage

1 You can store the brush tool and the crevice tool by placing them on the charging unit (fig. 13).

Replacement

- **Replace the inner filter if it can no longer be cleaned properly (usually after having been cleaned about 50 times).**

1 Remove the filter unit from the dust compartment (fig. 11).

2 Remove the outer filter from the holder by turning it anticlockwise (fig. 14).

3 Remove the inner filter from the holder by gently turning it anticlockwise (fig. 15).

4 Attach a new inner filter to the holder (fig. 16).

5 Push the tip of the inner filter inwards (fig. 17).

6 Reattach the outer filter to the holder (fig. 18).

Accessories

New inner filters are available under type no. FC8035. Contact your Philips dealer.

Environment

- Do not throw the appliance away with the normal household waste at the end of its life, but hand it in at an official collection point for recycling. By doing this you will help to preserve the environment (fig. 19).

Saving energy

If you are not going to use the appliance for a longer period of time, we advise you to remove the adapter from the wall socket to save energy.

Disposal of batteries

NiCd/NiMH batteries can be harmful to the environment and may explode if exposed to high temperatures or fire.

Batteries contain substances that may pollute the environment. Always remove the batteries before discarding the appliance or handing it in at an official collection point. Dispose of the batteries at an official collection point for batteries.

Only remove the batteries if they are completely empty.

Remove the batteries in the following way.

1 **Let the appliance run until it stops, undo the screws and open the vacuum cleaner (fig. 20).**

2 **Cut the connecting wires one by one and remove the batteries (fig. 21).**

Guarantee & service

If you need information or if you have a problem, please visit the Philips website at **www.philips.com** or contact the Philips Customer Care Centre in your country (you will find its phone number in the worldwide guarantee leaflet). If there is no Customer Care Centre in your country, turn to your local Philips dealer or contact the Service Department of Philips Domestic Appliances and Personal Care BV.

Troubleshooting

If the appliance does not work or does not work properly, first check the list below. If the problem is not mentioned in this list, the appliance probably has a defect. In that case we advise you to take the appliance to your dealer or to an authorised Philips service centre.

Problem	Causes	Solutions
The appliance does not work.	The appliance has not been charged.	Charge the appliance. When charging for the first time, leave the appliance to charge continuously for 16 hours. Always put the appliance back onto the charging unit after every use to recharge.
	The appliance has not been placed properly on the charging unit.	Make sure that the appliance is placed properly on the charging unit. The charging light will go on to indicate that the appliance is charging.
		Push the on/off slide backward to put it in the 'off' position. Make sure the slide is in the 'off' position during charging.
	The contact strips on the appliance and on the charging unit are dirty.	Wipe the dirt off the contact strips with a dry cloth.
	The adapter has not been inserted (properly) into the wall socket.	Insert the adapter into the wall socket (properly).
	If this problem is not caused by any of the factors mentioned above, please contact the Philips Customer Care Centre in your country.	
The appliance does not clean floors/the suction power is low.	The dust compartment is full.	Empty the dust compartment (see chapter 'Cleaning', section 'Emptying the dust compartment'
	The batteries are not fully charged.	Charge the appliance (see chapter 'Preparing for use', section 'Charging the appliance').
	The filter unit is dirty.	Clean the filter unit (see chapter 'Cleaning', section 'Emptying the dust compartment').
	The nozzle is clogged.	Remove the obstruction from the nozzle.
Dust escapes from the appliance.	The filter unit has not been placed properly in the dust compartment.	Reinsert the filter unit. See chapter 'Cleaning' for instructions about placing the filter unit in the dust compartment.
	The filter unit has not been placed in the dust compartment at all.	Place the filter unit in the dust compartment. See chapter 'Cleaning' for instructions about placing the filter unit in the dust compartment.
	The filter unit has not been assembled properly.	Assemble the inner and outer filter onto the filter holder. See chapters 'Cleaning' and 'Replacement' for instructions about assembling the filter unit.
	The dust compartment is full.	Empty the dust compartment (see chapter 'Cleaning', section 'Emptying the dust compartment').
	The filter unit is dirty.	Clean the filter unit (see chapter 'Cleaning', section 'Emptying the dust compartment').

产品图示（图一）.

A 缝隙吸嘴
B 毛刷
C 柔性缝隙吸嘴（仅限 FC6053）
D 外层过滤器
E 内层过滤器
F 充电座
G 适配器
H 积尘盒
I 积尘盒拆卸按钮
J 排气口
K 充电指示灯 (LED)
L 开/关滑块
M 接触片

注意事项.

使用产品前，请仔细阅读本使用说明书，并妥善保管以备日后参考。

- 在将本产品连接电源前，务必检查当地的电压是否与电源适配器所标电压一致。
- 如果本产品有任何损坏，请勿再使用。请将其送往经授权的飞利浦服务中心维修。
- 电源软线不能更换，如果软线损坏，此器具（电源适配器）应废弃。如果电源适配器或充电座损坏，务必用原来的型号更换，以免发生危险。
- 切勿吸取水或其它液体。切勿吸取易燃物质，并且不要吸取未冷却的灰烬。
- 切勿将吸尘器或充电座浸入水中。
- 在清洗充电座之前，务必将插头从插座中拔掉。
- 只能用本品随附的适配器和充电座给吸尘器充电。充电期间，适配器会有微热，这是正常的。
- 使用后务必切断吸尘器的电源。
- 切勿让儿童接触本产品。
- 充电座接触片上的电压为低电压（最高 12 伏），因此是安全的。
- 吸尘时切勿阻塞排气口。
- 充电前请先关闭产品电源。
- 使用吸尘器时总是装上过滤器。

使用准备.

安装充电座

1 如图所示将充电座安装在墙上。(图 2).
如果将充电座安装在墙上，则两个螺丝孔之间的距离应为 70 毫米。

2 也可以将充电座放置在水平表面（如桌面或写字台上）。(图 3).

3 多余的电线可缠绕在充电座上。(图 4).

为产品充电

使用前第一次充电时，充电时间不得少于 16 小时。

1 将适配器插入插座。

2 将吸尘器放置在充电座上。(图 5).

- 充电指示灯会亮起，表示吸尘器正在充电。(图 6).
  - 只要吸尘器与充电座连接，并且适配器插在插座中，充电指示灯就会一直亮着。
  - 充电指示灯无法指示内置电池的充电量。
  - 为了最大限度地延长充电电池组的使用寿命，应定期将电池组完全放电，方法是让产品一直运行到停止为止，然后再给电池组充满电。

使用本产品.

1 向前推动开/关滑块以接通产品电源。 (图 7).

2 向后推动开/关滑块以切断产品电源。 (图 8).

附件

产品随附有以下配件：
- 1. 一个用于清洁柔软表面的毛刷；
- 2. 一个用于清洁角落或狭窄缝隙的缝隙吸嘴；
- 3. 一个柔性缝隙吸嘴，可任意伸缩以清洁难以触及的地方（仅限型号 FC6053）。

1 装上要使用的配件。

2 将配件安装在产品的吸嘴上。 (图 9).

清洗.

清洁充电座之前，务必将适配器从插座中拔出。

1 用湿布擦拭本产品。

倒空积尘盒

请务必定期倒空积尘盒，并清洁过滤器。

1 将本产品拿到垃圾桶的上方，并按下积尘盒拆卸按钮。 (图 10).

2 将过滤器从积尘盒中取出。 (图 11).

3 用另一只手倒空积尘盒。

4 清洁外层过滤器和内层过滤器。
- 要清洁内层过滤器，可通过逆时针转动外层过滤器，将其从过滤器支架上取下。
- 如果外层过滤器和内层过滤器十分脏，可以用刷子或普通吸尘器清洁它们。
- 如有必要，还可用冷水或温水清洁内层和外层过滤器。

5 安装时，先将外层过滤器放回过滤器支架，然后将过滤器支架放回积尘盒内。确保过滤器支架插入正确。 (图 12).

在过滤器未干之前，切勿使用吸尘器。

存放.

1 您可以通过将毛刷和缝隙吸嘴放置在充电座上以进行存放。 (图 13).

更换.

- 如果内层过滤器已无法清洁干净，则应更换（通常是清洁了大约 50 次以后）

1 将过滤器从积尘盒中取出。 (图 11).

2 逆时针转动外层过滤器，将其从支架上取下。 (图 14).

3 朝逆时针方向轻轻转动内层过滤器，将其从支架上取下。 (图 15).

4 将新的内层过滤器安装到支架上。 (图 16).

5 将内层过滤器的顶端向内推。 (图 17).

6 将外层过滤器重新安装在支架上。 (图 18).

附件

可提供 F8035 型号的全新内层过滤器。请与飞利浦经销商联系。

环保

- 弃置产品时，请不要将其与一般生活垃圾堆放在一起；应将其交给官方指定的回收中心。这样做有利于环保。(图 19).

节约能源

如果在较长一段时间内不再使用本产品，建议您将适配器从插座中拔下，以节约能源。

电池的处理

镍镉和镍锰电池对环境有污染，并且在高温或大火环境下可能发生爆炸。

电池含有可污染环境的物质。在您丢弃产品时，请将电池取出，或将其送到官方回收点。在官方电池回收点处理电池。

当电池电量完全用尽时再将它丢弃。

按照以下方法取出电池。

1 让产品运行到停止为止，然后拧下螺丝，打开吸尘器。(图 20).

2 将电线一一剪断，然后取出电池。(图 21).

保修与服务

如果您需要详细信息或有任何问题，请浏览飞利浦网站，地址为 www.philips.com。您也可以与贵国的飞利浦顾客服务中心联系（您可以从全球保修卡中找到电话号码）。如果贵国没有飞利浦顾客服务中心，请与当地的飞利浦经销商或与飞利浦家庭小电器的维修中心联系。

PHILIPS

PHILIPS

产品 ： 飞利浦充电式吸尘器
型号 ： FC6053
额定电压 ： 220 V~
额定频率 ： 50Hz
额定输入功率： 19W
生产日期 ： 请见产品底部
产地 ： 中国 /01

珠海经济特区飞利浦家庭电器有限公司
中国珠海市三灶镇琴石工业区
邮政编码：519040
电话: 0756-7621898

全国顾客免费服务热线: 800 8203 678

本产品根据国标GB4706.1−1998, GB4706.7−1999, GB4343.1−2003及GB17625.1−2003制造

PHILIPS

PHILIPS

产品 ： 飞利浦充电式吸尘器
型号 ： FC6051
额定电压 ： 220 V~
额定频率 ： 50Hz
额定输入功率： 7W
生产日期 ： 请见产品底部
产地 ： 中国 /01

珠海经济特区飞利浦家庭电器有限公司
中国珠海市三灶镇琴石工业区
邮政编码：519040
电话: 0756-7621898

全国顾客免费服务热线: 800 8203 678

本产品根据国标GB4706.1−1998, GB4706.7−1999, GB4343.1−2003及GB17625.1−2003制造

请妥善保管本使用说明书

发行日期：2006/03/02

故障排除

如果产品不工作或不能正常工作，请首先按以下列表进行检查。如果列表中没有提到此问题，则说明该产品有故障。如果是这种情况，我们建议您将产品送到经销商处或飞利浦授权的服务中心。

问题	原因	解决办法
产品不能工作。	本产品还未充电。	为本产品充电。第一次充电时，应连续充电至少 16 小时。每次使用完本产品后，应立即将其放回充电座进行充电。
	本产品没有正确放置在充电座上。	确保本产品正确放置在充电座上。充电指示灯将亮起，表示本产品正在充电。
		将开/关滑块向后推至 off（关）的位置。确保开关在充电期间是位于 off（关）的位置。
	产品和充电座上的接触片很脏。	使用干布将接触条擦干净。
	充电器没有（适当地）插入插座。	将充电器（适当地）插入插座。
	如果上述方法还未能解决问题，则请联系您所在国家的飞利浦客户服务中心。	
本产品无法清洁地板/吸力弱。	积尘盒满了。	倒空积尘盒（见“清洁”一章的“倒空积尘盒”部分）。
	电池未充满。	为产品充电（见“使用准备”一章中的“为产品充电”部分）。
	过滤器很脏。	清洁过滤器（见“清洁”一章中的“倒空积尘盒”部分）。
	吸嘴阻塞。	从吸嘴中取出阻塞物。
灰尘从产品中溢出。	过滤器未正确安装在积尘盒中。	重新插入过滤器。见“清洁”一章以了解有关在积尘盒中安装过滤器的说明。
	过滤器未安装于积尘盒内。	将过滤器装入积尘盒。见“清洁”一章以了解有关在积尘盒中安装过滤器的说明。
	过滤器安装不当。	将内外层过滤器安装在过滤器支架上。见“清洁”和“更换”部分以了解有关安装过滤器的说明。
	积尘盒满了。	倒空积尘盒（见“清洁”一章的“倒空积尘盒”部分）。
	过滤器很脏。	清洁过滤器（见“清洁”一章中的“倒空积尘盒”部分）。